Owner's Manual

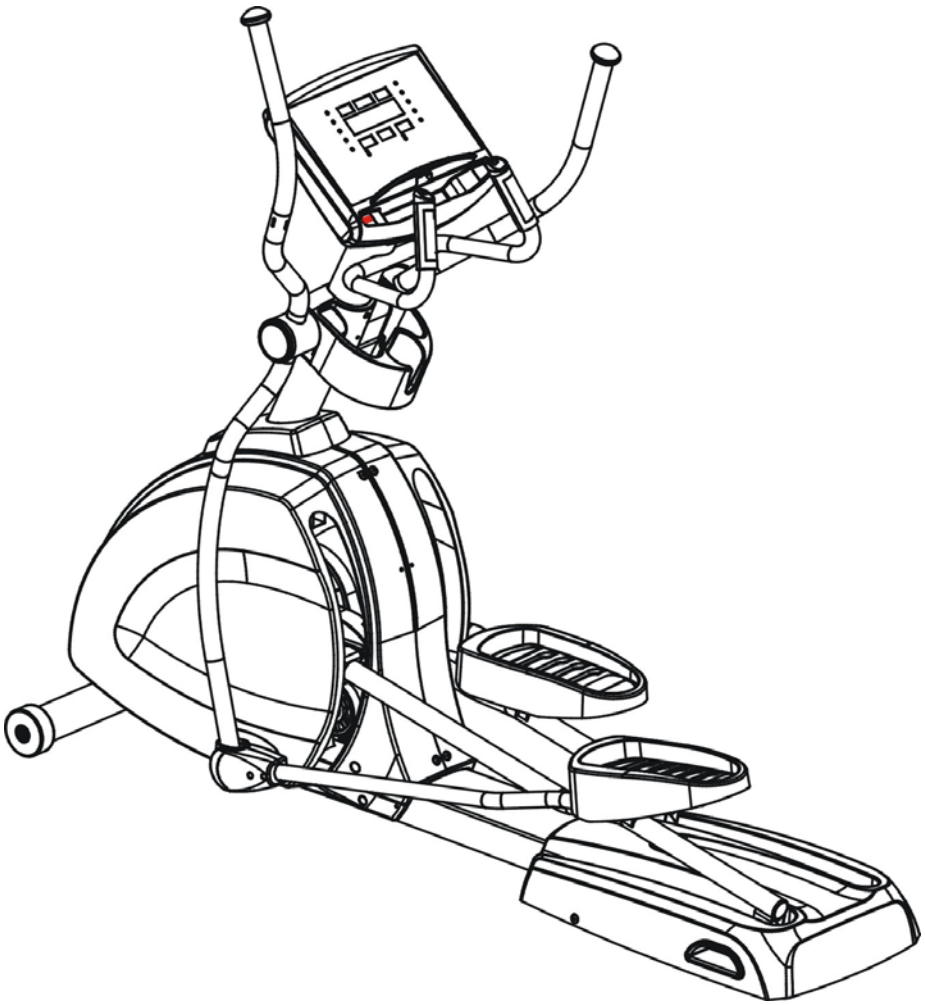

ELLIPTICAL Owner's guide

TABLE OF CONTENTS

TABLE OF CONTENTS ---------- 1

SAFETY PRECAUTIONS ---------- 2

TECHNICAL SPECIFICATIONS ---------- 3

UNPACKING & ASSEMBLY ---------- 4-9

WARM UP & COOL DOWN ----------10

PANEL CONTROL ---------- 11-12

PROGRAM ---------- 13-17

HOW TO USE THE TRAINER ---------- 18-20

OPERATION ---------- 21

PREVENTATIVE MAINTENANCE ---------- 22

Hint of how to dispose

- Do not dispose of electrical appliances as unsorted municipal waste, use separate collection facilities.
- Contact your local government for information regarding the collection systems available.
- If electrical appliances are disposed of in landfills or dumps, hazardous substances can leak into the groundwater and get into the food chain, damaging your health and well-being.
- When replacing old appliances with new once, the retailer is legally obligated to take back your old appliance for disposal at least for free of charge.

Descriptions & Specifications:

This Elliptical trainer is built in compliance with EN 957-9: 2003 with maximum permissble user's weight of 182 kg and classified as SA and equipped with speed dependent braking system.

This training equipment is a stationary exercise machine used to simulate walking or running without causing excessive pressure to the joints, hence decreasing the risk of impact injuries.

Elliptical trainers offer a non-impact cardiovascular workout that can vary from light to high intensity based on the resistance preference set by the user. It will work the your upper and lower body and increase cardio capacity and maintain fitness of your body also.

Before beginning any exercise program, consult your doctor.

This is especially important for people aged over 35 or who have previously had health problems, and those who have not done any sport for a number of years.

Remark:
1. The classification of SA means this elliptical trainer is designed for studio use and with good accuracy class, the variations of power consuming are within ±5W up to 50W and ±10% over 50W.
2. The braking resistance level is adjustable by the controller, the power consumption is dependent on the pedaling speed.

SAFETY PRECAUTIONS

WARNING: Read all instructions in this manual before use and keep this user's manual for entire life of this product for further reference.

WARNING: It is owner's responsibility to ensure that all users of this elliptical trainer are adequately informed about all safety precautions before use. Use the elliptical trainer only as described in this manual.

WARNING: Consult your physician before beginning any exercise program.

WARNING: Do not to use if you feel dizzy or have an acute cold or fever.

WARNING: To reduce the risk of serious injury, read the following safety precautions before using the exercise elliptical.

WARNING: Keep children under the age of 14 and pets away this trainer at all times. Before the training starts, remove all objects within a radius of 2 meters from the machine.

WARNING: Never insert objects into any opening in the exercise elliptical. If an object should drop inside, carefully retrieve it.

WARNING: Close supervision is necessary when this exercise elliptical is being used by or near children, or disabled persons.

WARNING: Warning up exercise is necessary before you start your training.

WARNING: Your health could be impaired by incorrect or excessive trainings. If you feel pain or dizziness while exercising, stop immediately and cool down then consult a doctor before beginning a planned training program.

WARNING: The pulse sensor is not a medical device. Various factors including the user's movement, may affect the accuracy of the heart rate readings. The Pulse sensor is intended only as an exercise aid in determining heart rate rends in general.

WARNING: Wear appropriate exercise clothing and when using the trainer. Do not wear loose clothing that could be caught by this trainer.

WARNING: Assemble the machine exactly as described in the installation instructions and use the enclosed parts contained in the parts& tool kits.

WARNING: Keep the exercise elliptical indoors, away from moisture and dust. Place the exercise elliptical on a stable & level surface, with a mat beneath it to protect the floor or carpet. Make sure that there is enough clearance around the exercise elliptical to mount, dismount, and use it.

WARNING: Inspect and properly tighten all parts regularly and. If any damages were found, keep the equipment out of use until repair and call our service center or the retailer for further helps.

WARNING: Always follow the console instructions for proper operation

WARNING: When mounting and dismounting the exercise elliptical, always hold the handlebars tightly when the elliptical trainer comes to rest then get off the pedal platform that is in the lowest position and land on the floor.

WARNING: When you stop exercising, allow the pedals to slowly come to a stop.

WARNING: Allow only one person at a time on your machine.

TECHNICAL SPECIFICATIONS

SPECIFICATIONS:

Length: 203 cm
Width: 68cm
Weight of product：104kg
Program：9 programs, 4 HRC
Standard features: 6 LED+8*32 dot matrix，HR receive，USB
Resistance System：Electromagnet
Stride Length：502 mm
Power source：Built-in generator & rechargeable battery 12V-1.2AH

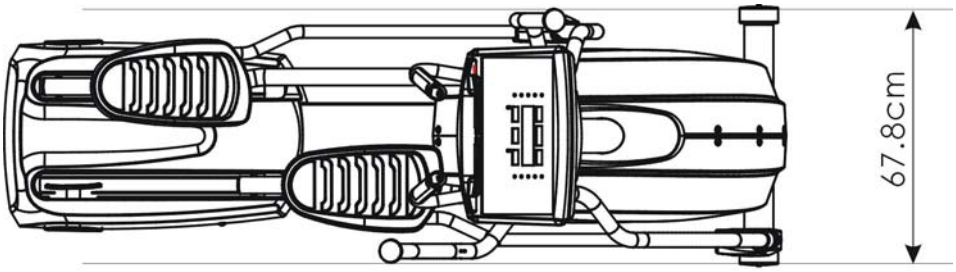

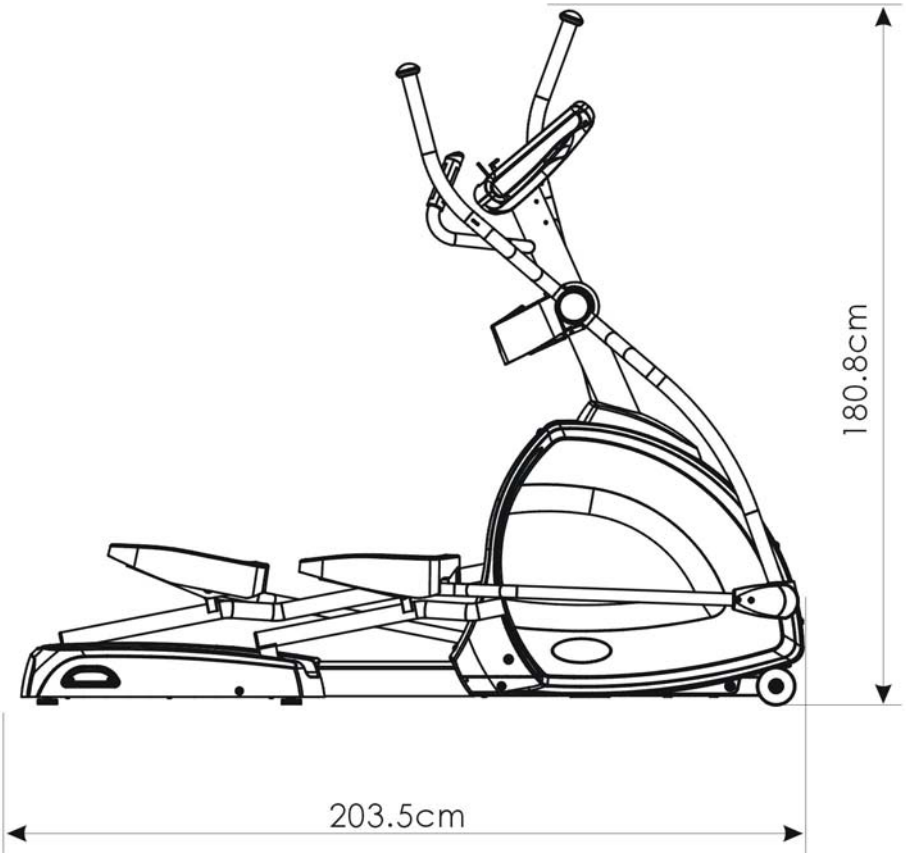

UNPACKING & ASSEMBLY

PARTS

#5-2

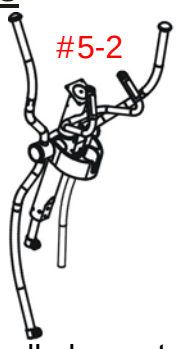

Handle bar set

#5-1

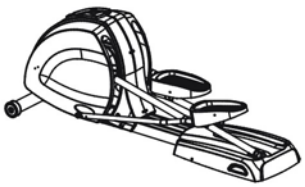

Housing

#5-3

Console set

#5-5

Console frame cover

#5-11
#5-12

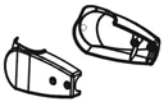

Left cover, right arm
Right cover, right arm

#5-14
#5-15

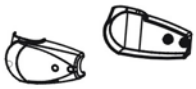

Left cover, left arm
Right cover, left arm

HARDWARE KIT

Step6	#5-7 M4*12mm / 8pcs (Left / right cover)	#5-4 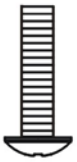 M3*30mm / 2pcs (Left / right cover)

1pc

1pc

Allen wrench / 1pc
(3mm)

Allen wrench / 1pc
(5mm)

Allen wrench / 1pc
(6mm)

UNPACKING & ASSEMBLY

TO avoid components damage, please unpacking carton carefully, we suggest you to put a pad on the floor before you put the elliptical down.

NOTE! It might need 2~3 persons to assembly!

Step1 Move the Elliptical.

Please grab the grip back of the Elliptical and raise it up carefully, you may depend on the pair of the rollers to move it to the position you want.

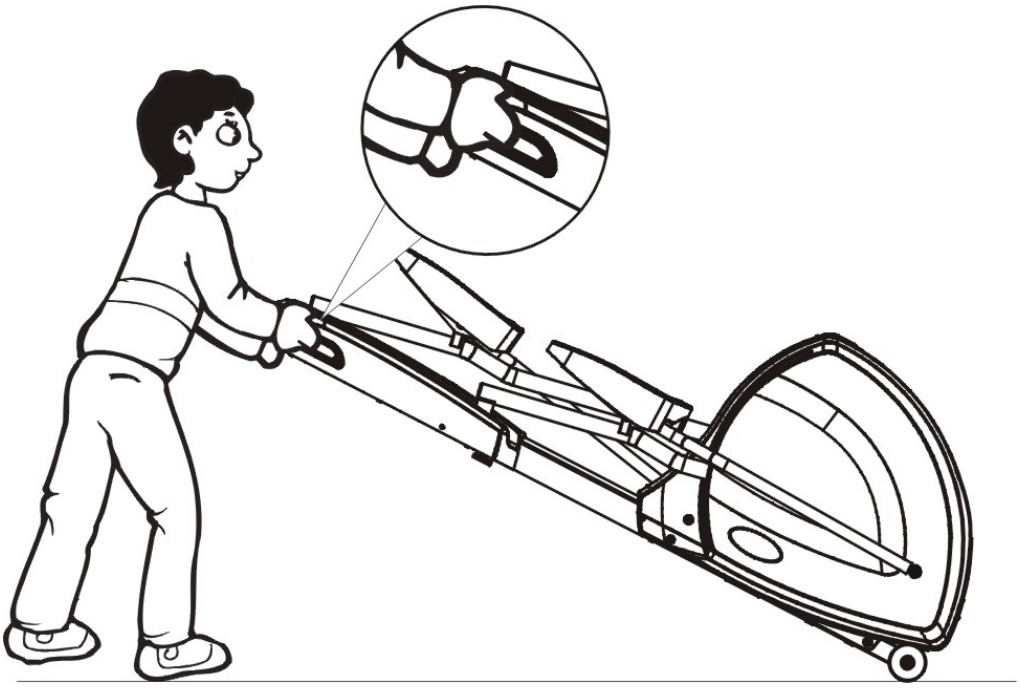

UNPACKING & ASSEMBLY

Step2. Assembly Console frame cover.

1).Assemble Console frame cover on the handle bar set according to instruction.

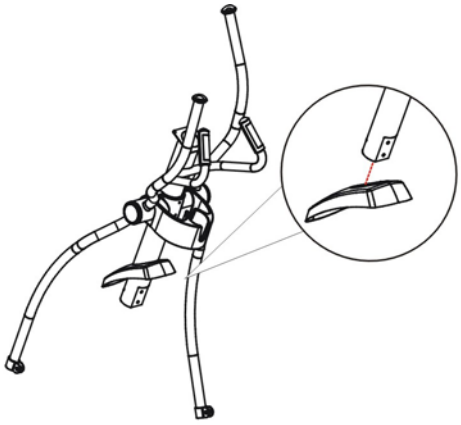

#5-5

X1

Step3.Diassemble pre-lock screws.

1).Use Allen wrench (6mm) to take off 2 screws (M8*100mm)、2 screws (M8*110mm)、4 S washers (M8)、4 washers (M8) on the main frame.

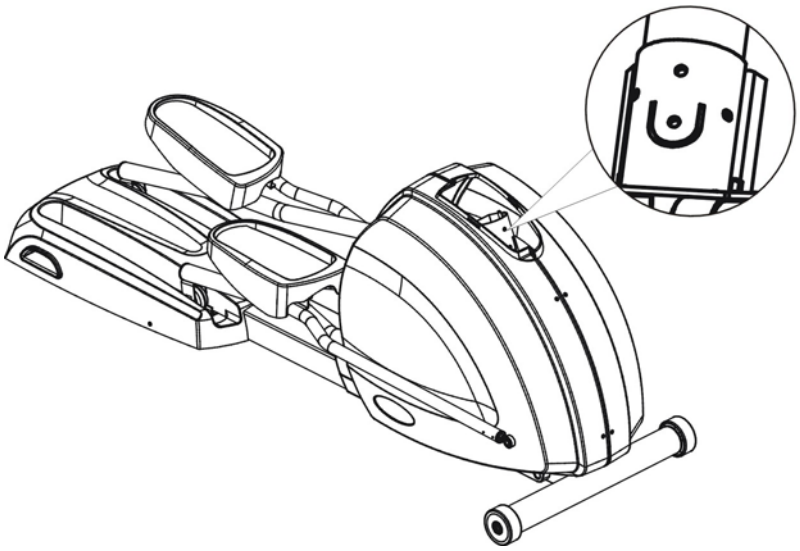

Allen wrench
(6mm)

UNPACKING & ASSEMBLY

Step4.

1).Connect the console wire.

2). Use Allen wrench (6mm) to lock on 2 screws (M8*100mm) 、2 screws (M8*110mm) 、4 S washers (M8) 、4 washers (M8) for making the main frame fix to console handle set.

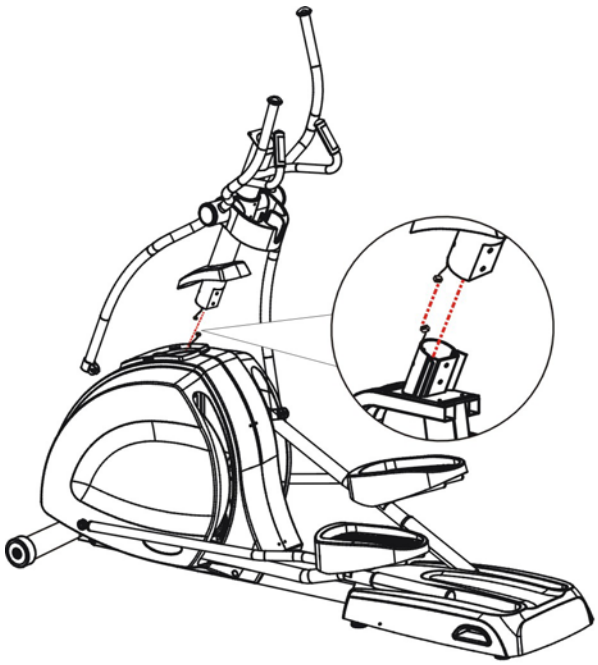

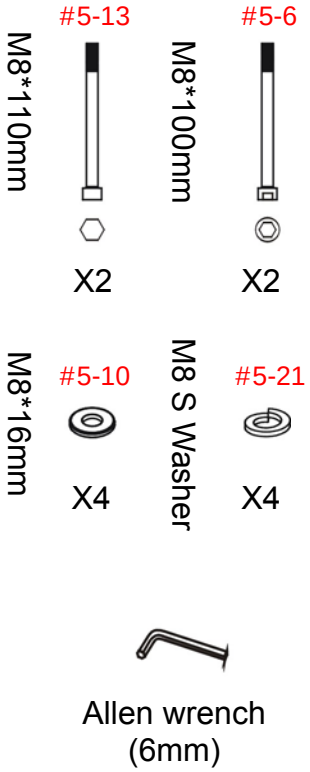

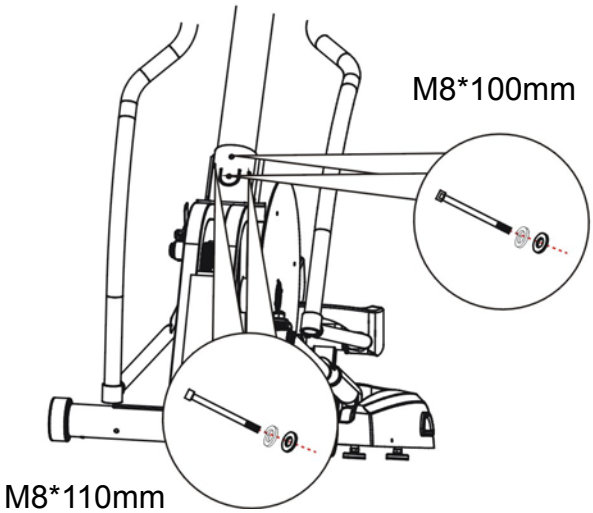

UNPACKING & ASSEMBLY

Step5. Assembly Handle arm on the Pedal linkage.

1).Take off the pre-lock screws.

2).Use 2x M8*23mm screws, M8 washer and M8*16mm screws to fasten Handle arm and Pedal linkage.

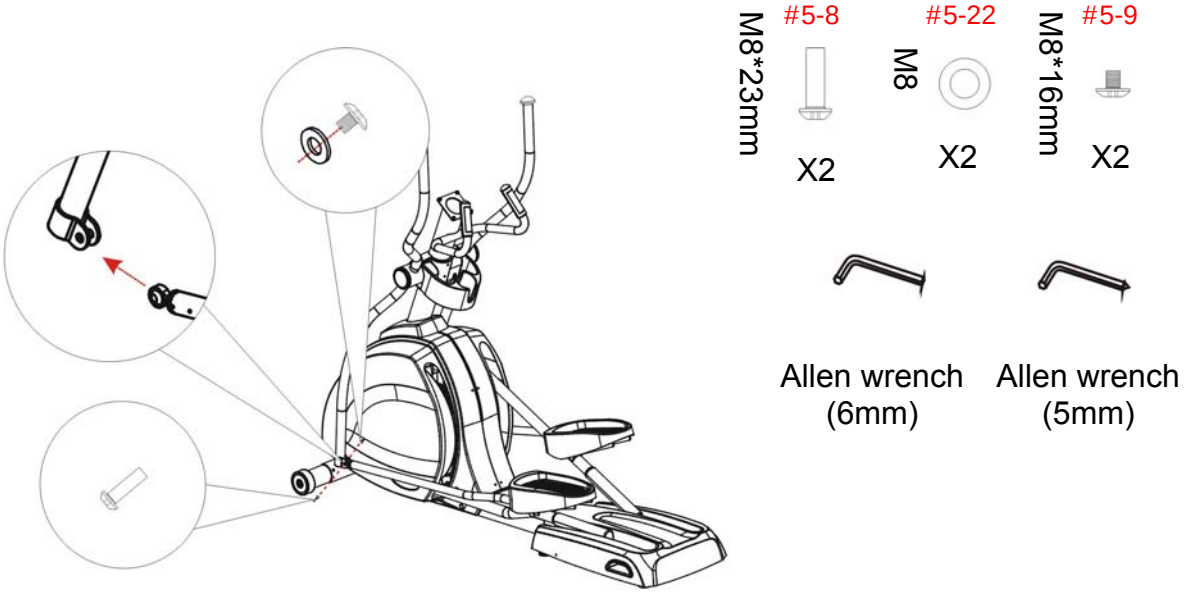

Step 6. Assembly Left / right cover on the Pedal Linkage.

1).Assemble right/left arm cover with pedal arm.

2).You may push the pedal to the front of Elliptical for making lock the housing easier.

3).Fasten 4pcs M4x12mm screws on left/right arm cover by 5mm wrench.

4).Fasten 1pcs M3x30mm screw on left/right arm cover by 3mm wrench.

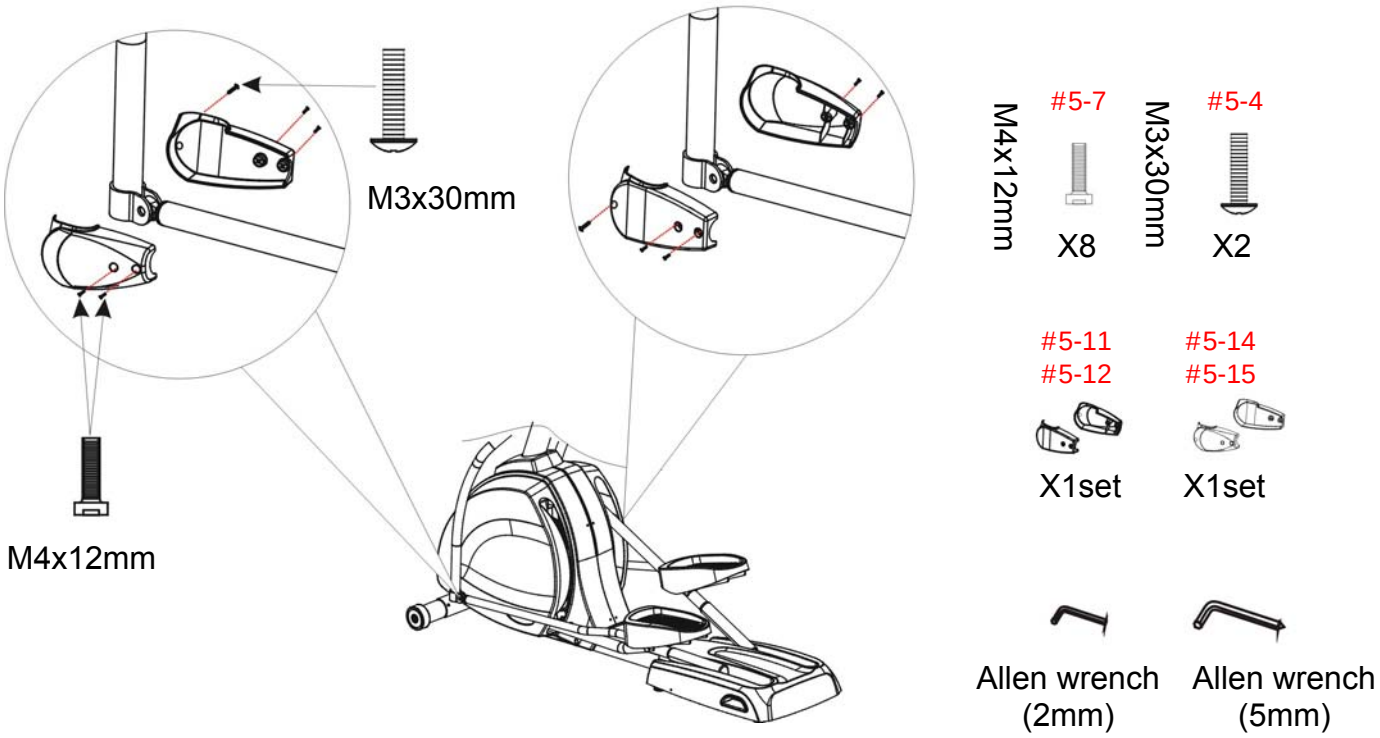

UNPACKING & ASSEMBLY

Step 7. Assembly Console set on the Handle bar set.

1).Connect upper and lower console wire and hand pulse wire.

2).Connect the lower CABLE wire.

3).Fasten console set and handle bar set by 4x M5*12mm screws.

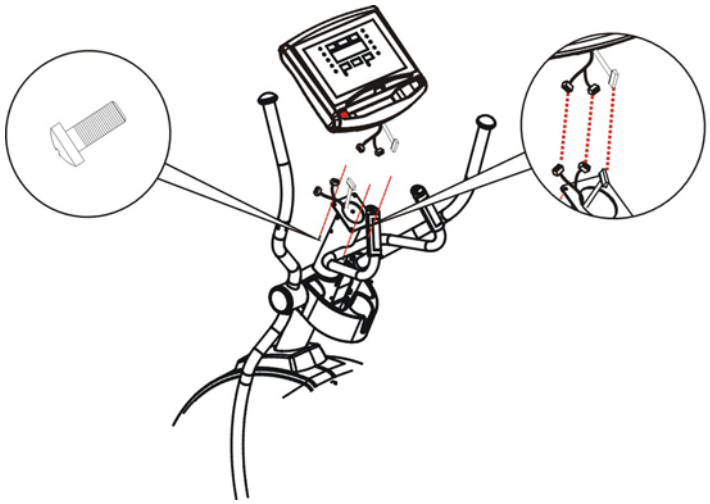

X4

Allen wrench
(5mm)

WARM UP & COOL DOWN

A successful exercise program consists of a warm up, aerobic exercise and a cool down. Warming up is an important part of your workout, and should begin every session. It prepares your body for more strenuous exercise by heating up and stretching out your muscles. At the end of your workout, repeat these exercises to reduce sore muscle problems. We suggest the following warm-up and cool-down exercises:

HEAD ROLLS

Rotate your head to the right for one count, feeling the stretch up the left side of your neck. Next rotate your head back for one count, stretching your chin to the ceiling and letting your mouth open. Rotate your head to the left for one count, and finally, drop your head to your chest for one count .
Repeat this action for several times.

SHOULDER LIFTS

Lift your right shoulder up toward your ear for one count. Then lift your left shoulder up for one count as you lower your right shoulder.
Repeat this action for several times.

QUADRICEPS STRETCH

With one hand against a wall for balance, reach behind you and pull your right foot up. Bring your heel as close to your buttocks as possible. Hold for 15 seconds and repeat with left foot up.

SIDE STRETCHES

Open your arms to the side and continue lifting them until they are over your head. Reach your right arm as far upward toward the ceiling as you can for one count. Feel the stretch up your right side. Repeat this action with your left arm.

CALF/ACHILLES STRETCH

Step your right foot in front of your body. Lean against a wall with your arms and stretch your left foot backward your body. Bend forwards your right foot, and slightly push your buttock toward to the wall for 15 seconds.
Repeat the action with front left foot and rear right foot for another 15 seconds.

INNER THIGH STRETCH

Sit with the soles of your feet together with your knees pointing outward. Pull your feet as close into your groin as possible. Gently push your knees toward the floor. Hold for 15 seconds.
Repeat this action 3-5 times.

TOE TOUCHES

Slowly bend forward from your waist, letting your back and shoulder relax as you stretch toward your toes. Reach down as far as you can and hold for 15 seconds.

HAMSTRING STRETCHES

Keep your right leg straight and the left foot on the floor; try to stretch your right hand toward the toe, hold this posture for 15 seconds.
Relax, then repeat the action for left leg.

PANEL CONTROL

Display & Keys

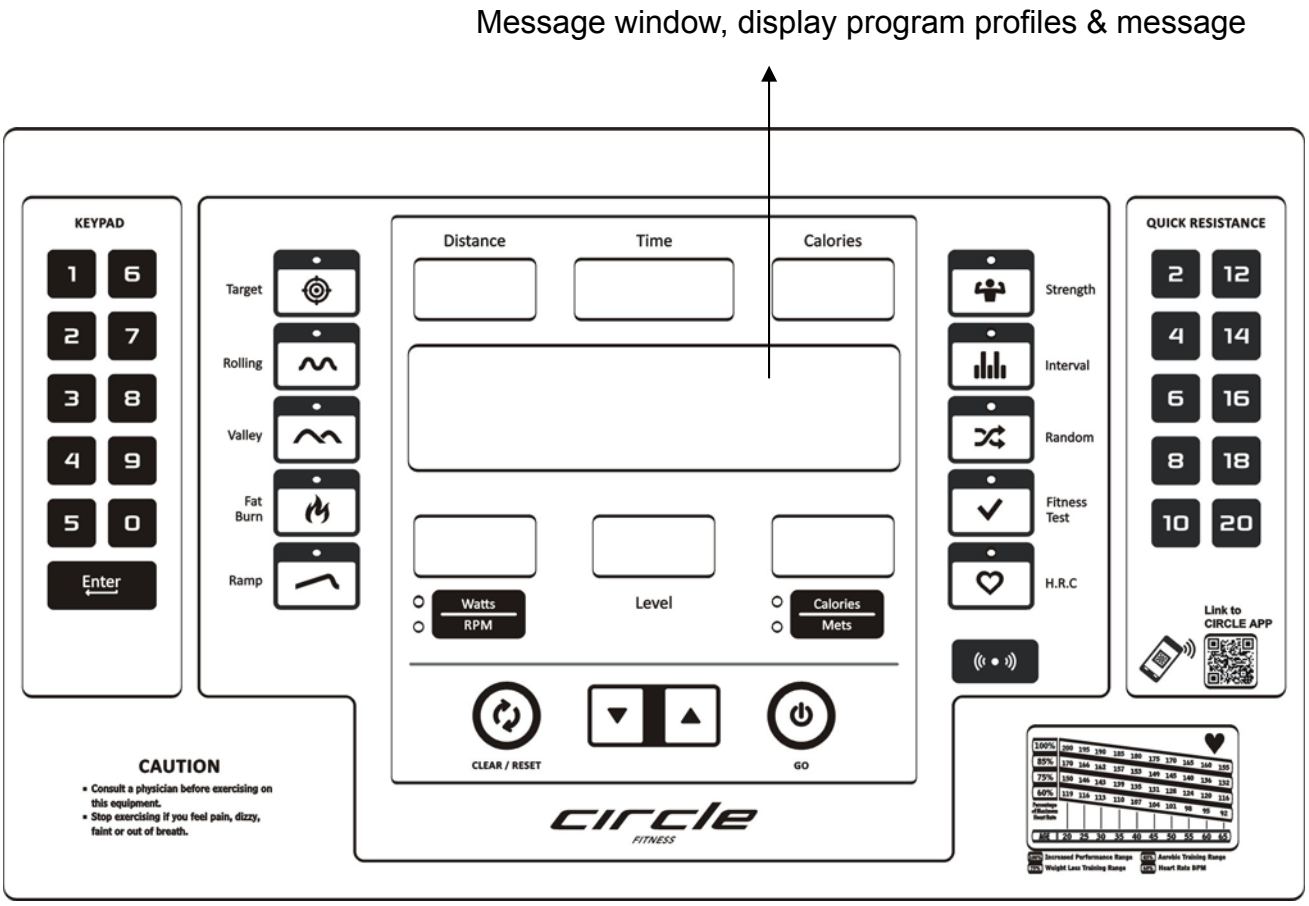

PANEL CONTROL

Display function

Dispaly	Defination
Distance	Displays total distance KM/Mi.
Time	Displays time remaining or total time.
Heart Rate	Displays hand grip and wireless Heart Rate reading.
Watts	Displays consuming watt.
RPM	Displays pedaling RPM.
Level	Displays current resistance level L1~L25
Calories	Displays calories burned.
Mets	Displays the multiple of rest.

Key function

Key	Function
▲ / ▼	Adjusts the resistance level while in use. Adjusts program types and program values.
Watts / RPM	Switch display Watts←→RPM
Calories / Mets	Switch display Calories←→Mets
Keypad	Set value.
Enter	Confirm value entered.
Quick Start	Quick start or program start.
Reset / Clear	Clear the setting value while setting. Reset back to idle mode while pause.
Program keys	Select program directly.
Quick keys for level	Adjusts level to a predetermined value. There are 10 level quick keys.
Blue Tooth	Turn on the bluetooth function and search for the device to connect with App.

PROGRAM

Program operation：

1. 【Target】
   1.1. Press 『Target』 key to select【Target】**program**.
      1.1.1. Message window show『**SET BODYWEIGHT THEN PRESS ENTER**』, set body weight then press『ENTER』to next setting.
      1.1.2. Set time：Message window show『**SET TIME THEN PRESS** ENTER』, set time then press『ENTER』to next setting.
      1.1.3. Set distance：Message window show『**SET DISTANCE THEN PRESS** ENTER』,set distance then press『ENTER』to next setting.
      1.1.4. Set calories：Message window show『**SET CALORIES THEN PRESS ENTER**』, set calories then press『QUICK START』to begin workout.
   1.2. Beginning the workout：
      1.2.1. If either, Time, Distance and Calories are set the program will count down. Once the preset value reaches 0 the program will end. If no goal is set the program will not end unless manually stopped.

2. 【Preset Programs】:
   2.1. Press program key to select a preset program, there are 7 preset program keys(ROLLING、VALLEY、FAT BURN、RAMP、STRENGTH、INTERVAL、RANDOM).
      2.1.1. Message window show『**SET BODYWEIGHT THEN PRESS ENTER**』, set body weight then press『ENTER』to next setting.
      2.1.2. Set time：Message window show『**SET TIME THEN PRESS** ENTER』, set time then press『ENTER』to next setting.
      2.1.3. Set level：Message window show『**SET LEVEL**』once then show program profile, press▲ or ▼ to set level 1~5(if select RANDOM program, Message window show『CHANGE PROFILE BY PRESS ARROW EY』once, press▲ or ▼ to change the profile randomly), press『QUICK START』to begin workout.
   2.2. Beginning the workout：
      2.2.1. The resistance level will change automatically according to the program settings, if time is entered during setup then the segment time=time set / 32. You can use any resistance level key to change resistance level during your workout.
      2.2.2. The program will end when the counter reaches 0.
   2.3. Preset program profiles：

   P1=ROLLING、P2=VALLEY、P3=FAT BURN、P4=RAMP、P5=STRENGTH、P6=INTERVAL 、P7=RANDOM

PROGRAMS

Prog.	SEG	1	2	3	4	5	6	7	8	9	10	11	12	13	14	15	16
P1	LEVEL 1	3	4	4	5	6	6	7	7	6	6	5	4	4	3	3	4
	LEVEL 2	5	6	6	8	8	9	9	9	8	8	7	7	6	6	5	6
	LEVEL 3	7	8	9	10	10	11	11	11	10	10	10	9	9	8	8	9
	LEVEL 4	9	10	10	11	12	12	13	13	12	12	11	10	10	9	9	10
	LEVEL 5	11	12	13	12	12	13	14	15	14	13	12	11	11	10	9	11
P2	LEVEL 1	9	9	8	7	6	6	5	5	4	4	3	3	2	2	2	1
	LEVEL 2	11	11	10	9	9	8	8	7	7	6	5	4	3	2	2	1
	LEVEL 3	12	12	11	10	9	9	8	8	7	7	6	6	4	3	3	1
	LEVEL 4	14	14	11	11	10	10	9	8	8	7	7	6	4	3	3	1
	LEVEL 5	15	15	13	13	12	11	10	10	9	8	7	6	5	4	3	1
P3	LEVEL 1	1	1	3	3	3	5	5	5	6	7	7	8	8	9	9	10
	LEVEL 2	1	1	5	5	5	7	7	7	8	9	9	10	10	11	11	12
	LEVEL 3	1	2	5	6	6	7	8	8	9	10	10	11	12	12	13	13
	LEVEL 4	2	3	6	6	7	8	9	9	10	10	10	11	12	12	13	14
	LEVEL 5	3	4	7	7	8	8	9	9	10	10	11	12	12	13	14	15
P4	LEVEL 1	1	1	1	2	2	2	3	3	3	4	4	4	5	5	5	6
	LEVEL 2	1	1	2	2	3	3	3	3	5	5	5	6	6	7	7	7
	LEVEL 3	1	2	2	3	3	4	4	5	5	6	6	7	7	8	8	9
	LEVEL 4	2	2	2	3	3	4	5	5	5	6	6	7	7	8	9	9
	LEVEL 5	2	2	3	3	4	4	5	5	6	6	7	7	8	8	9	9
P5	LEVEL 1	2	2	2	3	3	3	4	4	4	5	5	5	6	6	6	7
	LEVEL 2	3	3	3	4	4	4	5	5	5	6	6	6	7	7	7	8
	LEVEL 3	3	3	4	4	5	5	6	6	6	6	7	7	7	8	8	9
	LEVEL 4	4	4	4	5	5	6	6	6	7	7	8	8	9	9	9	10
	LEVEL 5	4	4	5	5	6	6	6	7	7	8	8	9	9	9	10	10
P6	LEVEL 1	1	2	3	4	6	3	4	7	3	4	8	3	4	9	3	4
	LEVEL 2	3	4	5	6	8	5	6	9	5	6	10	5	6	11	5	6
	LEVEL 3	4	5	6	7	10	5	7	10	5	7	11	5	7	12	5	7
	LEVEL 4	4	5	7	8	11	6	8	11	6	8	11	6	8	12	6	8
	LEVEL 5	5	6	7	8	12	7	9	12	7	9	12	7	9	13	7	9

PROGRAMS

Prog.	SEG	17	18	19	20	21	22	23	24	25	26	27	28	29	30	31	32
P1	LEVEL 1	4	5	6	6	7	7	6	6	5	4	4	3	4	5	6	6
	LEVEL 2	6	7	7	8	9	9	8	8	7	6	5	6	6	7	7	8
	LEVEL 3	10	10	11	11	10	11	10	9	8	8	7	7	6	7	8	9
	LEVEL 4	10	11	12	12	13	13	12	12	11	10	10	9	10	11	12	12
	LEVEL 5	12	13	14	14	15	15	14	13	13	12	11	10	12	13	14	14
P2	LEVEL 1	1	2	2	2	3	3	4	4	5	5	6	6	7	7	8	8
	LEVEL 2	1	2	3	3	4	5	6	7	7	8	8	8	9	9	9	10
	LEVEL 3	1	2	3	4	5	6	7	7	8	8	9	9	10	10	11	11
	LEVEL 4	1	3	3	4	6	7	7	8	8	9	10	10	11	11	14	14
	LEVEL 5	1	3	4	5	6	7	8	9	10	11	11	12	13	14	15	15
P3	LEVEL 1	10	9	9	8	8	7	7	6	5	5	5	3	3	3	1	1
	LEVEL 2	12	11	11	10	10	9	9	8	7	7	7	5	5	5	1	1
	LEVEL 3	13	12	12	11	10	10	9	8	8	7	6	6	5	5	3	1
	LEVEL 4	13	12	13	11	10	10	10	9	9	8	7	6	6	5	4	2
	LEVEL 5	15	14	13	12	12	11	10	10	9	9	8	8	7	7	4	3
P4	LEVEL 1	6	7	7	7	8	8	8	8	6	5	4	4	3	2	1	1
	LEVEL 2	8	8	9	9	10	10	11	11	11	9	9	8	8	7	7	6
	LEVEL 3	9	9	10	10	10	11	12	13	12	11	9	9	8	8	7	7
	LEVEL 4	9	9	10	11	12	13	13	14	14	12	10	9	9	8	8	7
	LEVEL 5	10	10	11	12	13	14	15	15	14	14	13	12	10	10	9	8
P5	LEVEL 1	7	7	8	8	8	9	9	9	10	10	10	11	11	11	12	12
	LEVEL 2	8	8	9	9	9	10	10	10	11	11	11	12	12	12	13	13
	LEVEL 3	9	9	9	10	10	10	11	11	11	12	12	12	13	13	14	14
	LEVEL 4	10	10	11	12	12	12	13	13	13	14	14	14	14	15	15	15
	LEVEL 5	10	11	11	12	12	13	13	14	14	14	15	15	15	16	16	16
P6	LEVEL 1	6	4	8	3	4	9	3	4	6	4	2	7	6	4	1	1
	LEVEL 2	8	6	10	5	6	11	5	6	8	6	4	9	8	6	3	3
	LEVEL 3	10	6	11	5	7	12	5	7	9	7	5	11	9	7	4	4
	LEVEL 4	11	7	12	6	8	13	6	8	11	8	6	12	11	9	6	4
	LEVEL 5	12	8	12	9	11	15	11	9	11	9	8	12	11	10	7	5

PROGRAMS

3. 【HRC】

3.1. HRC operate with chest belt only，will be reset to idle mode if no any heart rate signal input after 60 seconds.

3.2. Press **【HRC】key to select the program**，message window show【THR】,press ▲ or ▼ Keyto select【HRC 60%】、【HRC 75%】or【HRC 85%】,press『ENTER』to confirm and starting to settings.(HRC 60%=(220-Age)x 60% / 75%=(220-Age)x 75% / 85%=(220-Age)x 85%)

3.2.1. Selected【THR】:

3.2.1.1. Target heart rate setting：Message window show『**SET THR THEN PRESS ENTER**』，set Target heart rate then press『ENTER』to next setting.

3.2.1.2. Message window show『**SET BODYWEIGHT THEN PRESS ENTER**』，set body weight then press『ENTER』to next setting.

3.2.1.3. Set time：Message window show『**SET TIME THEN PRESS** ENTER』，set time then press『ENTER』to next setting.

3.2.2. Selected【HRC 60%】or【HRC 75%】or【HRC 85%】:

3.2.2.1. Set age：Message window show『**SET AGE THEN PRESS ENTER**』，set age then press『ENTER』to next setting.

3.2.2.2. Message window show『**SET BODYWEIGHT THEN PRESS ENTER**』，set body weight then press『ENTER』to next setting.

3.2.2.3. Set time：Message window show『**SET TIME THEN PRESS** ENTER』，set time then press『ENTER』to next setting.

3.2.3. Set beginning Level：Message window show『**SET BEGIN LEVEL THEN PRESS ENTER**』,press▲ or ▼Key to set begin level, press『QUICK START』to begin workout.

3.3. Beginning the workout：

3.3.1. The program will compare the real time and preset target heart rate every 30 seconds to adjust resistance level until the actual heart rate is reaches within + or – 5 beats of the preset target heart rate.

3.3.2. During the program, if the actual pulse rate ≦ target workout heart rate minus 5, will be increased one level every 30 seconds until the max. level.

3.3.3. During the program, if the actual pulse rate ≧ target workout heart rate plus 5, will be decreased one level every 30 seconds until the min. level.

3.3.4. You can use any level key to change the level during your workout.

3.3.5. The program will end when the counter reaches 0, then enter cool down.

PROGRAMS

4. **Fitness Test ：**

4.1. Press『**Fitness Test**』to select the program.

4.2. Message window show『**SET BODYWEIGHT THEN PRESS ENTER**』, set body weight then press『ENTER』to next setting.

4.3. Set age, message window show『**SET AGE THEN PRESS ENTER**』, set age then press『Quick Start』to begin workout.

4.4. Beginning the workout：

4.4.1. 3 minutes workout per stage, first stage(0~3 minute), the WATT preset value is 50W, second begin watt depends on average heart rate of 2~3 minute of first stage show as below:

2:01~3:00 Ave. HR / Stage	＜80bpm	80~89bpm	90~100bpm	＞100bpm
2 – (3:01~6:00)	125W	100W	75W	50W
3 – (6:01~9:00)	150W	125W	100W	75W
4 – (9:01~12:00)	175W	150W	125W	100W
5 – (12:01~15:00)	200W	175W	150W	125W
6 – (15:01~18:00)	225W	200W	175W	150W
7 - (18:01~21:00)	250W	225W	200W	175W
8 - (21:01~24:00)	275W	250W	225W	200W
9 - (24:01~27:00)	300W	275W	250W	225W
10 - (27:01~30:00)	-----	300W	275W	250W

4.4.2. The program will end when heart rate reaches MHR 85％-10 over 10 seconds, message window will show【VO2 MAX = XX】, press『Reset/Clear』KEY back to idle mode.

PROGRAMS

Target Heart Rate Chart

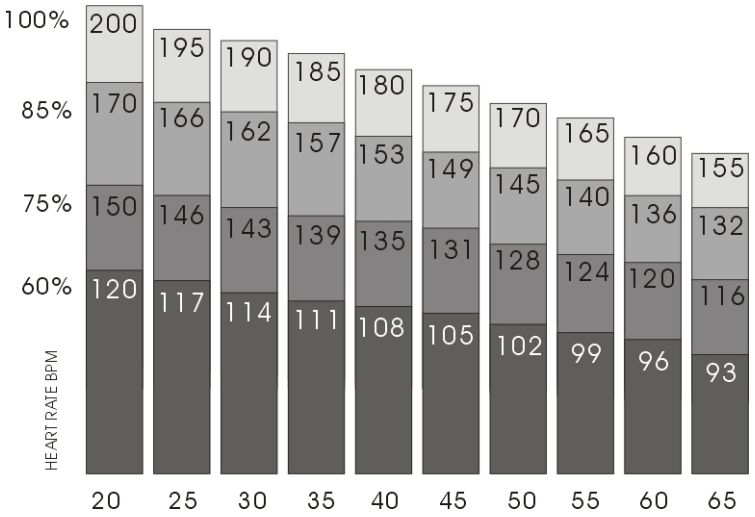

Increased Performance Range

Aerobic Training Range

Weight Loss Training Range

Please consult your physician to find your optimal heart rate and Watt setting

MOVING

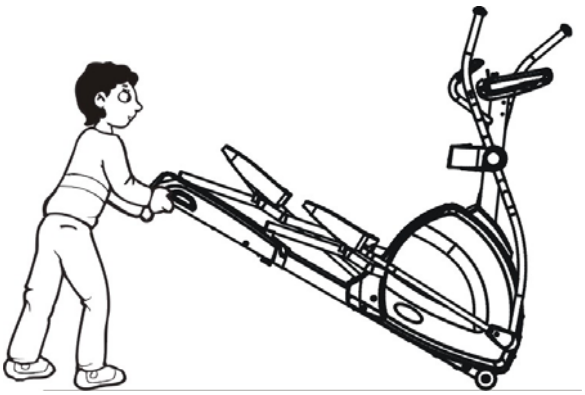

HOW TO USE THE TRAINER

How to Mount and Dismount the Trainer

Hold swing bars & step forward:

Hold swing bars & step backward.

HOW TO USE THE TRAINER

Hold handlebars on post & step forward

Hold handlebars on post & step backward

OPERATION

Headphone jack and USB Port

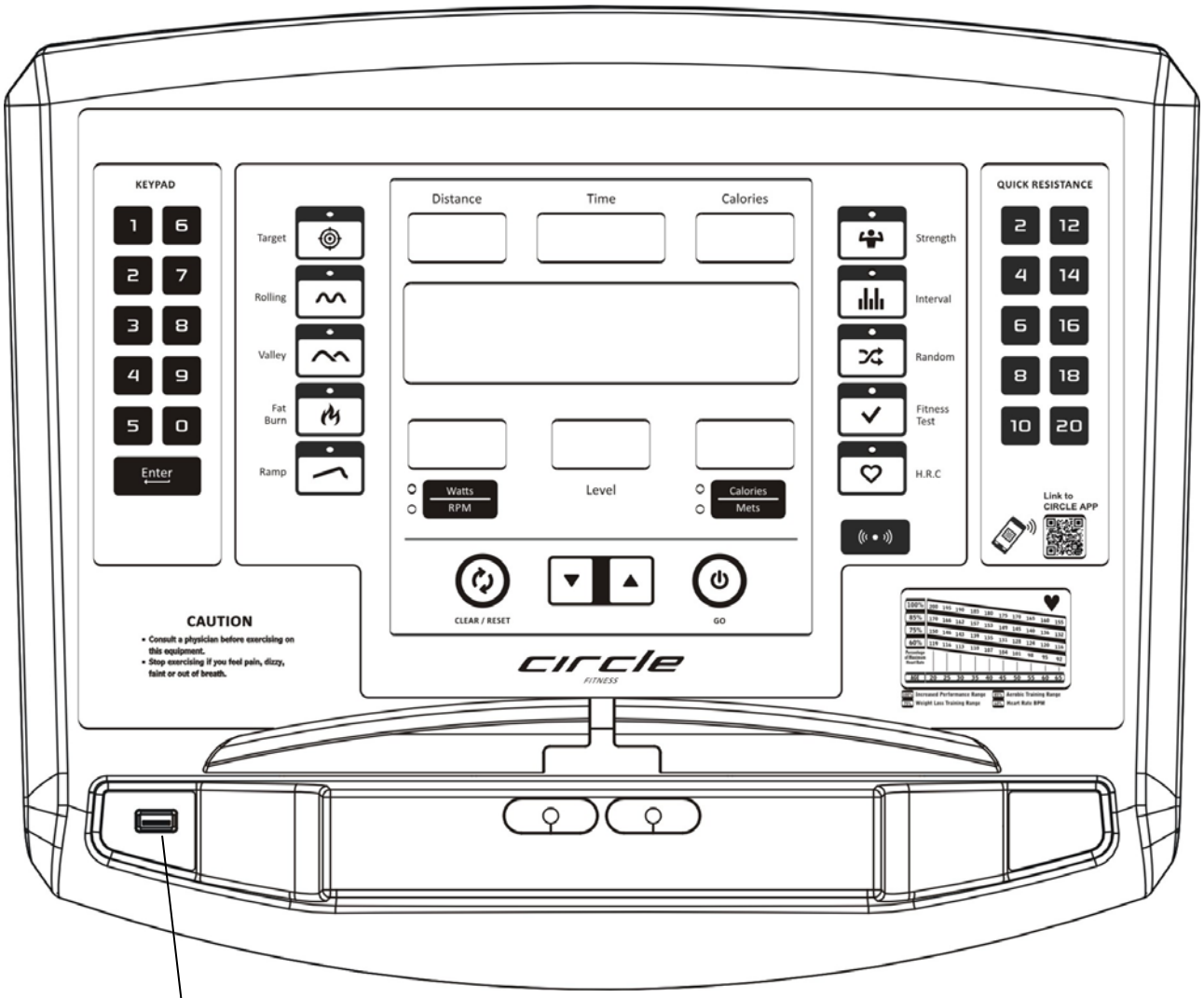

USB port on the console mainly acts as a smartphone charger, and it will not upload any file/data from your smartphone to the treadmill console. Charging spec : 5V/0.5A

PREVENTATIVE MAINTENANCE

F833709-000-03 EP-7A00C2 10503

HOW TO CAREFOR YOUR ELLIPTICAL

The Safety of the equipment can be maintained only if the equipment is examined regularly for damage or wear. If maintenance is required, keep the equipment out of use until defective parts are repaired or replaced.
Pay special attention to parts that are subject to wear as outlined in the *Preventative Maintenance Schedule.*

The following preventive maintenance will keep the exercise elliptical operating at peak performance：

- Locate the exercise elliptical in a cool, dry place.
- Clean the top surface of the pedals regularly.
- Keep the display console free of fingerprints and salt build-up caused by sweat.
- Use a 100% cotton cloth, lightly moistened with water and mild liquid cleaning product, to clean the exercise elliptical other fabrics, including paper towels, may scratch the surface. Do not finger to press the selection buttons on the console.
- Clean the housing thoroughly on a regular basis.

NOTE：

Before use the elliptical, please make sure the Aluminum tracks are cleaned and lubricated, this is to prevent the damage and noise on tracks when you are exercising.
The exercise elliptical can be wiped clean with a soft cloth and mild detergent. **Do not use abrasives or solvents**. To prevent damage to the console, keep liquids away from the console and keep the console out of direct sunlight.

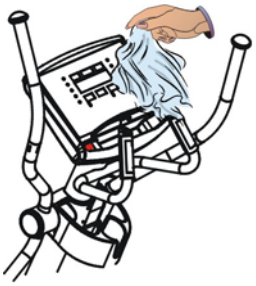

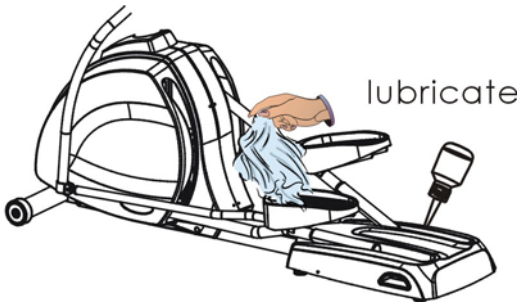

Preventative Maintenance Schedule

Follow the schedule below to ensure proper operation of the product.

ITEM	WEEKLY	MONTHLY	BI-ANNUALLY	ANNUALLY
Display Console	C	I		
Console Mounting Bolts			I	
Accessory Tray	C	I		
Frame	C			I
Plastic Covers	C	I		
Pedals and Straps	C	I		
KEY：C=Clean; I=Inspect				

Hand pulse
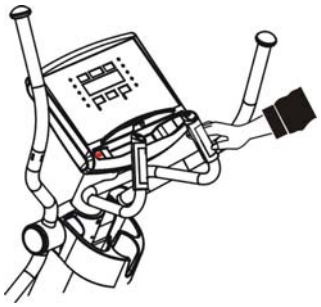
Before/after running, to put your feet separately on each side rein, then hold the hand grip, so as to avoid any shaking. If the heart beat is too high or irregular, please have your hands out of the hand grip until the pulse display returns to " 0 ", then redoing the test.
Don't do this test while running.